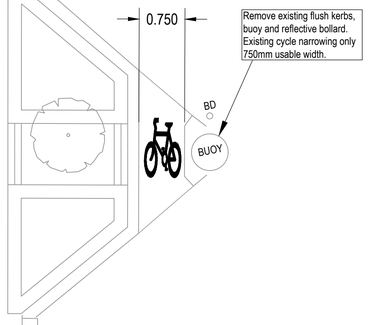

Existing cycle narrowing 0.75m

Scale 1:50

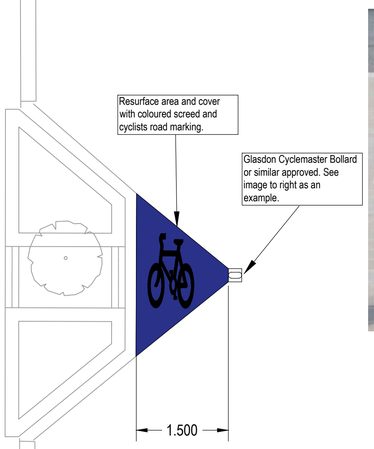

Proposed cycle narrowing 1.5m

Scale 1:50

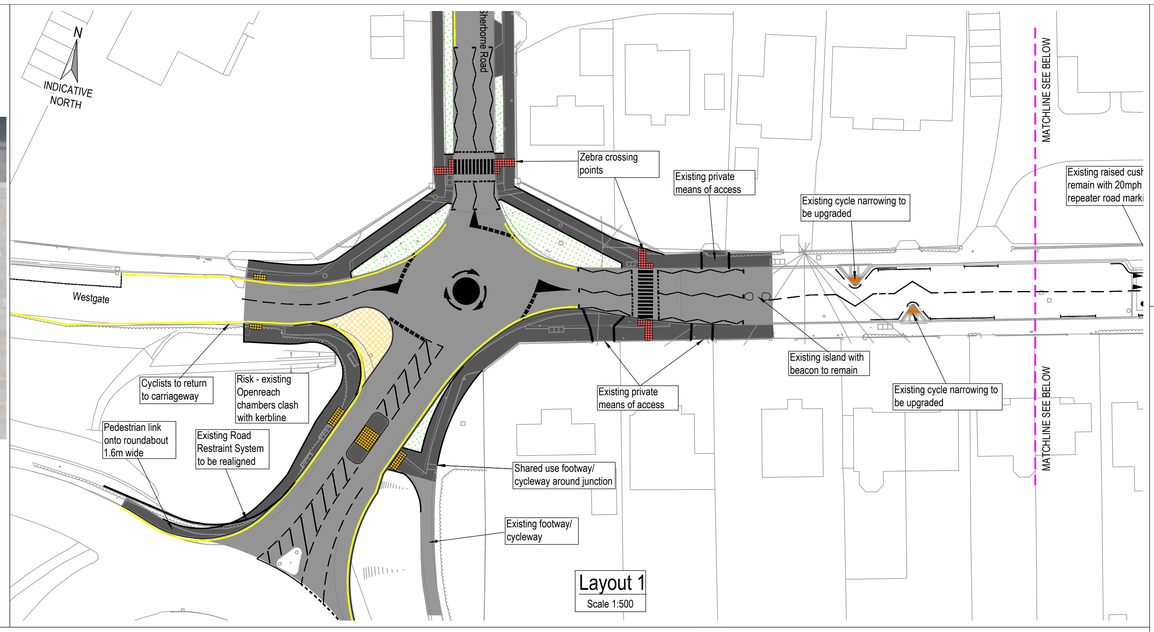

Layout 1

Scale 1:500

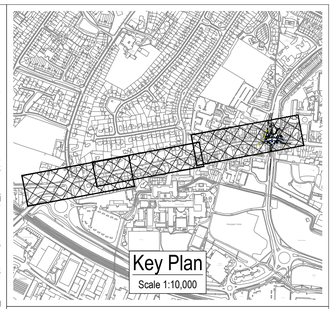

Ordnance Survey © Crown Copyright 2019.
All rights reserved. License number 100022432

Key

- Proposed carriageway
- Proposed cycleway
- Proposed/existing footways
- Proposed cycle lane
- Proposed landscaping areas/grass verge
- Proposed landscaping/mature planting
- Proposed buff tactile paving at uncontrolled crossing
- Proposed red tactile paving at controlled crossing
- Existing bollards to be removed together with low level kerb and road marking amended to suit 1.5m wide detail

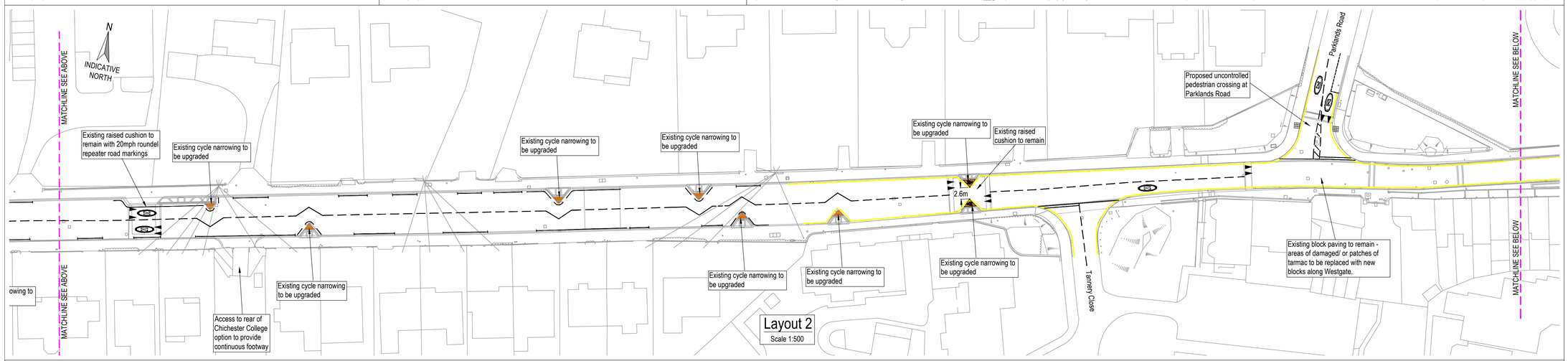

Layout 2

Scale 1:500

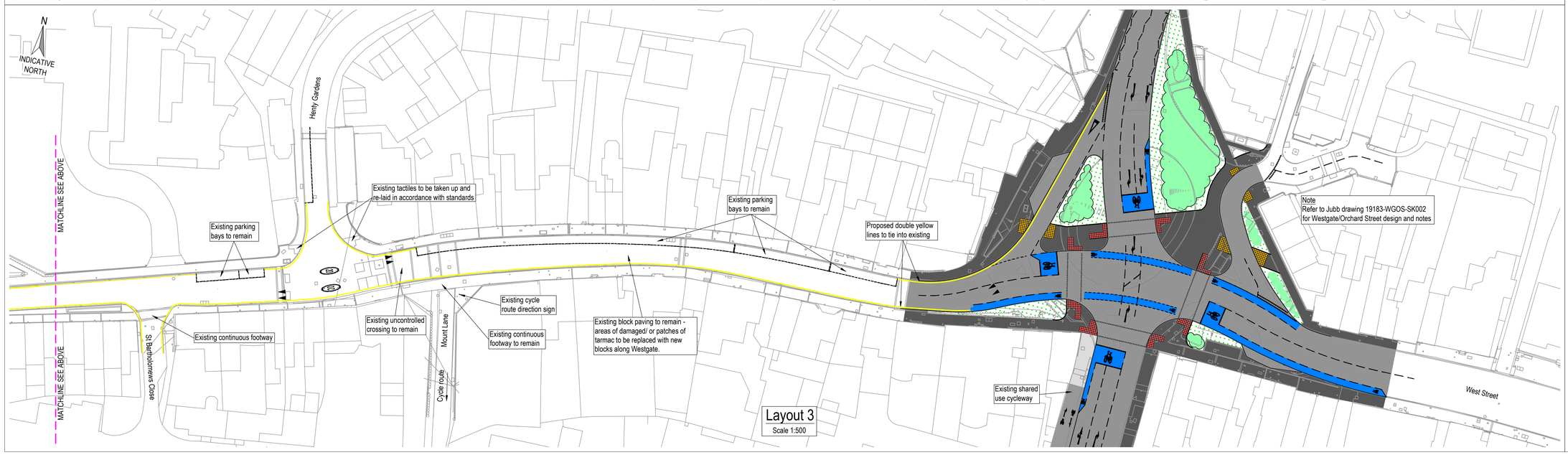

Layout 3

Scale 1:500

Rev	Date	Description	By	Apvd
P3	01.10.19	Layout updated	SW	GS
P2	09.09.19	Layout updated	SW	GS
P1	03.09.19	Preliminary issue	SW	GS

PROJECT:
WEST CHICHESTER S278 WORKS

TITLE:
SHERBORNE ROAD ROUNDABOUT TO WESTGATE ROUNDABOUT

CLIENT:
miller homes
Linden HOMES

SCALE@A1:
As shown

PROJECT REF:
19183

DRAWING No: SITE-SK004

REV: P3

Revision Referencing
P = Preliminary A = Approval T = Tender C = Construction

Jubb
Bristol, Cardiff, Plymouth, Winchester
2A Oak Tree Court, Cardiff Gate Business Park, Cardiff
jubb.uk.com
+44(0)292 052 4444